Casambi Solution - Fixture Level Control Classroom w/ Daylighting & Plug Load Control

CASAMBI

Casambi Ecosystem Products

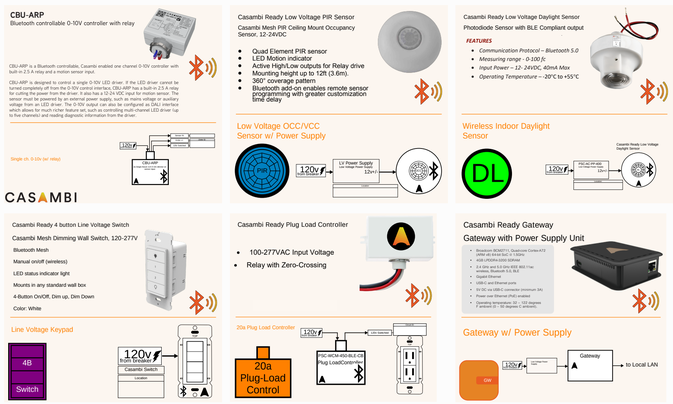

Code Compliance

C405.2.2	Timeswitch Controls
C405.2.1	Occupancy Sensor Controls
C405.3	Light Reduction Control
C405.2.6	Manual Controls
C405.11	Automatic Receptacle Control

2 Zone Classroom

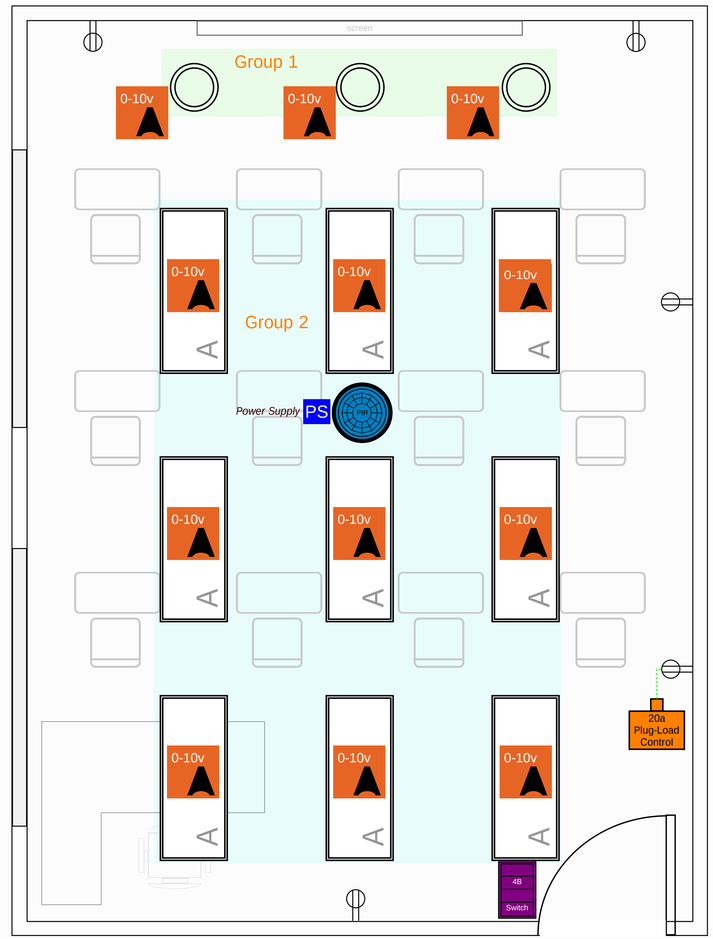

3 Zone Classroom w/ Daylight Harvesting

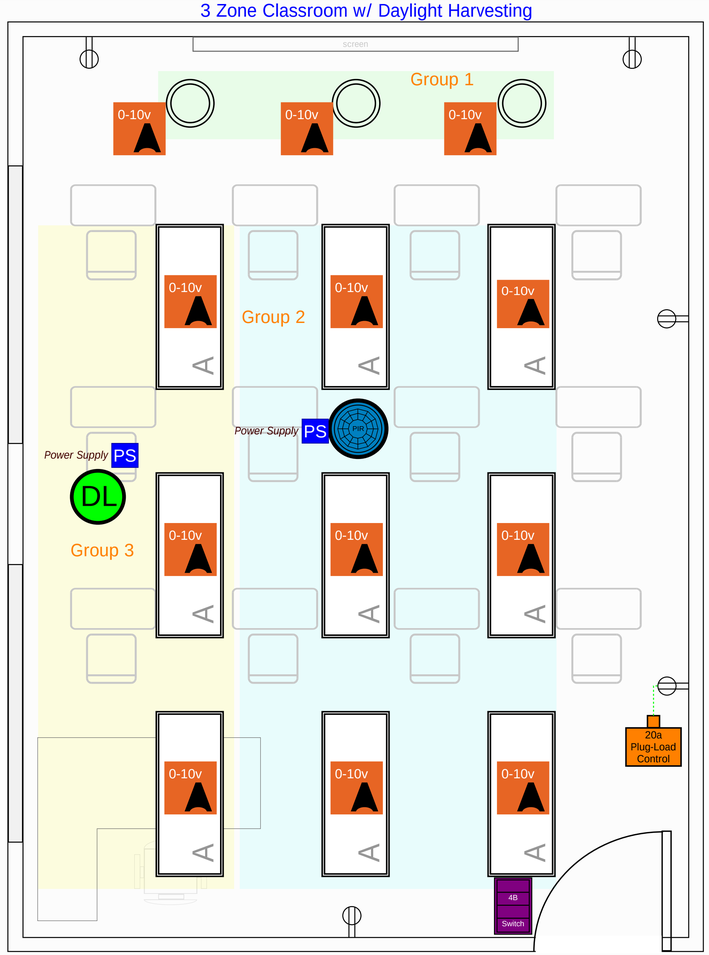

Sequence of Operations Example:

1. Manual light on via wall switch
2. Auto-off via OCC Sensor
3. Plug Load Control via Sensors/OCC
4. Light Reduction via DL Sensor
5. Multi Zones/Groups/Scenes

Design Considerations

1. Wireless Switch & Sensor available for Retro Fit
2. Room can be fully networked with other Casambi Devices /Rooms
3. See knowledge base for setting up daylighting

Single-Line

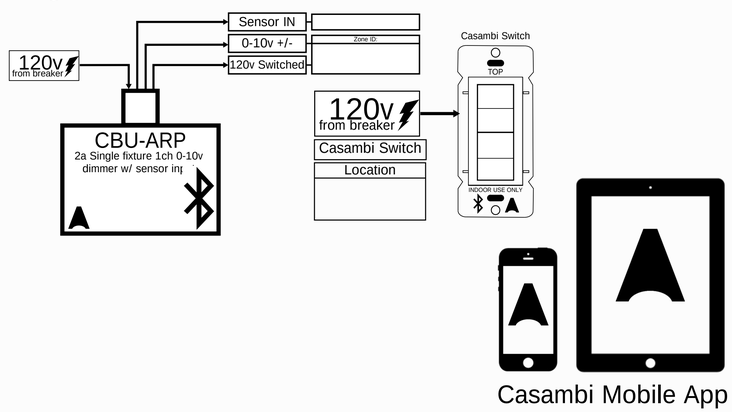
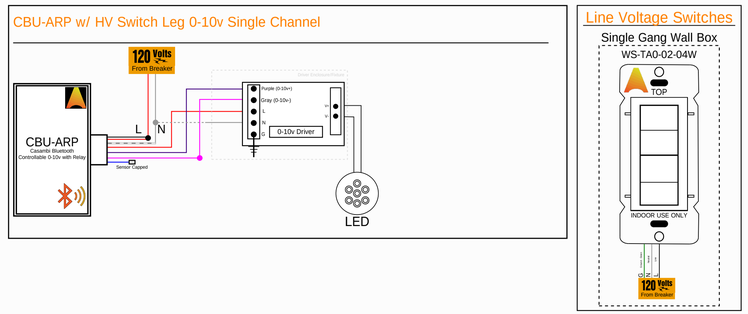
Detailed Wiring